DocuSign Envelope ID: DABAC6E0-A145-4137-8D61-D7E201BAA2A8

PROJECT REFERENCE NO.	SHEET NO.
14SP.2045I.1	2
ROADWAY DESIGN ENGINEER	PAVEMENT DESIGN ENGINEER
9/15/2016	9/16/2016

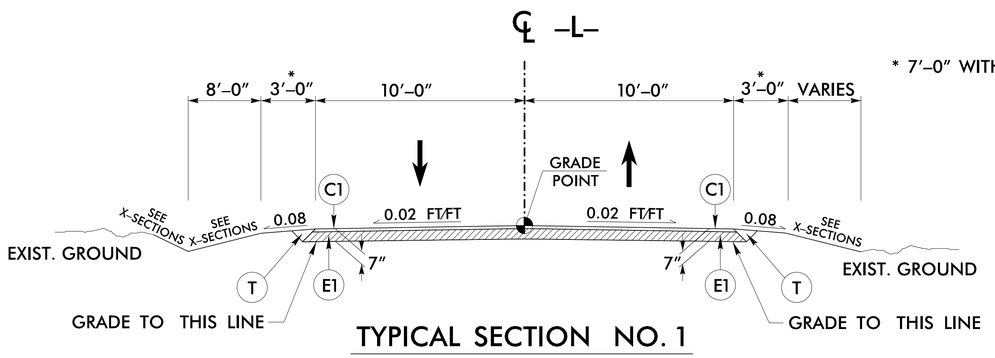

* 7′–0″ WITH GUARDRAIL

TYPICAL SECTION NO. 1

USE TYPICAL SECTION NO. 1

–L– STA. 12+30.00 TO –L– STA. 12+98.66 (BEG. CULVERT)
–L– STA. 13+28.13 (END CULVERT) TO –L– STA. 14+00.00

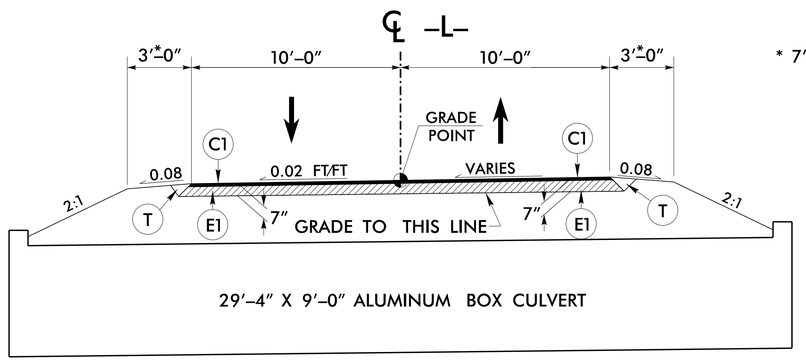

* 7′–0″ WITH GUARDRAIL

TYPICAL SECTION NO. 2

USE TYPICAL SECTION NO. 2

–L– STA. 12+98.66 (BEG. CULVERT) TO –L– STA. 13+28.13 (END CULVERT)

	PAVEMENT SCHEDULE
C1	PROP. APPROX. 3″ ASPHALT CONCRETE SURFACE COURSE, TYPE S9.5B, AT AN AVERAGE RATE OF 168 LBS. PER SQ. YD. IN EACH OF TWO LAYERS.
E1	PROP. APPROX. 4″ ASPHALT CONCRETE BASE COURSE, TYPE B25.0B, AT AN AVERAGE RATE OF 456 LBS. PER SQ. YD.
T	EARTH MATERIAL

NOTE: PAVEMENT EDGE SLOPES ARE 1:1 UNLESS SHOWN OTHERWISE

6/2/99
9/9/2016
S:\Communications\Transportation\31236-06 MTC 14SP.2045I.1 Henderson 73\Roadway\Proj\Henderson 73_rdy_typ.dgn
(Barrie Morris)